NON-ELECTRIC SHADE REDUCER
FITTING INSTRUCTIONS

IL1501

No experience of electrical wiring is required to install this pendant.

Fitting and changing a light bulb.

Make sure the electricity is switched off at the fuse board before removing bulb.

1. Ensure the lamp holder is in good condition and is not damaged before proceeding.
2. Allow the old bulb to cool down before handling. Remove existing light bulb from lamp holder.
3. Remove lower half of lamp holder and make sure the lamp holder is not damaged.
4. If required, clip the reducing ring into top ring of the shade. ①
5. Place upper half of lamp holder, attached to cable, through top ring of shade. Replace lower half of lamp holder to hold the pendant in place.②
6. Fit the bulb: Type and wattage as indicated on the product.
7. Switch the electricity back on at the fuse board. You may now switch on the light.

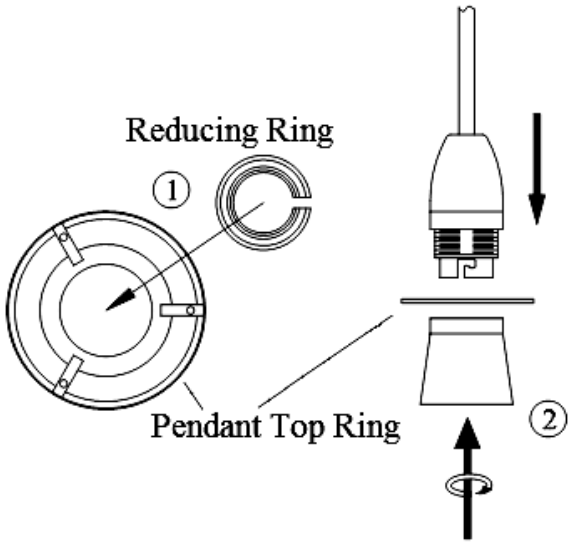

UK: Dar lighting ltd, Wildmere Road, Banbury, Oxon, OX16 3JZ
IRELAND & EU: Dar Lighting Ireland Limited, Suite 108, Q House, 76 Furze Road, Sandyford Industrial Estate, Dublin 18

NON-ELECTRIC SHADE REDUCER
FITTING INSTRUCTIONS

IL1501

No experience of electrical wiring is required to install this pendant.

Fitting and changing a light bulb.

Make sure the electricity is switched off at the fuse board before removing bulb.

1. Ensure the lamp holder is in good condition and is not damaged before proceeding.
2. Allow the old bulb to cool down before handling. Remove existing light bulb from lamp holder.
3. Remove lower half of lamp holder and make sure the lamp holder is not damaged.
4. If required, clip the reducing ring into top ring of the shade. ①
5. Place upper half of lamp holder, attached to cable, through top ring of shade. Replace lower half of lamp holder to hold the pendant in place.②
6. Fit the bulb: Type and wattage as indicated on the product.
7. Switch the electricity back on at the fuse board. You may now switch on the light.

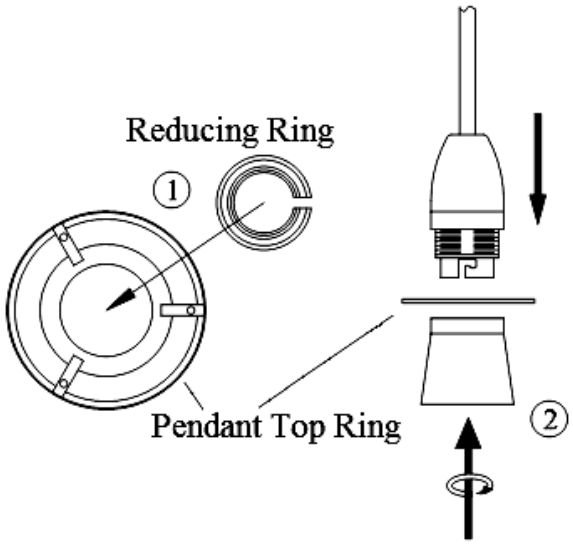

UK: Dar lighting ltd, Wildmere Road, Banbury, Oxon, OX16 3JZ
IRELAND & EU: Dar Lighting Ireland Limited, Suite 108, Q House, 76 Furze Road, Sandyford Industrial Estate, Dublin 18

Issue 2 10/20