DIECAST ALUMINIUM GLASS PANEL IP44 WALL LANTERN

These instructions are provided for your safety.
Please read them carefully before commencing work and retain them for future reference.
This fitting has IP rating of IP44 and is suitable for outdoor use when connected as instructed.

SAFETY INFORMATION

* It is recommended that this fitting is installed by a qualified electrician.
* This fitting should be fitted in accordance with IEE Wiring Regulations and relevant Building Regulations.
* To prevent electrocution switch off at the mains supply before installing or maintaining this fitting. Ensure other persons cannot restore the electricity supply without your knowledge.
* To avoid damage to concealed wiring during installation, establish the direction of the supply cable before drilling fixing holes.
* This fitting is Class I = ⏚ and should be fitted to a lighting supply (with earth) protected by a 5 amp fuse or equivalent circuit breaker. Outdoor / bathroom product must be connected to a supply protected by a 30mA RCD.
* This fitting is rated IP44 and is suitable for outdoor use when fitted in accordance with these instructions and IEE wiring regulations.
* Always be sure to use the correct type and wattage of bulbs as indicated on the fitting. Never exceed the wattage stated.
* When changing the bulb, always switch off at the mains and allow the old bulb to cool down before handling. Dispose of used bulbs carefully.
* **THIS FITTING HAS A 3 YEAR MANUFACTURERS WARRANTY AGAINST CORROSION – SUBJECT TO RESTRICTIONS.**

INSTALLATION

Note: This fitting should only be installed in normal non non-aggressive atmospheric locations to prevent corrosion.
This outdoor light has been designed for outdoor environments and tested to IP44 standards, it is unsuitable for harsh coastal environments, including any area with salty air conditions. Installing in a coastal or harsh environment may mean the finish of this light degrades much more quickly and cannot be covered under warranty. This light should not be installed on surfaces that could contain corrosive substances, including lime-based renders or paint.

1. Ensure the house electricity supply is off at the fuse board.
2. If removing the existing fitting, carefully note the position of each set of cables. If there are loop in cables that are not connected to the light, these must be terminated in a separate terminal block not connected to the fitting.
3. Remove the backplate from the fitting by undoing 2 x hex capped nuts and any washers, then separate and lift the terminal block away from the plastic backplate whilst taking care not to break the plastic fixing pins. Remove the glass from the fitting by unscrewing anticlockwise. **Keep capped nuts, any washers and the glass for later.**
4. Use the plastic backplate as a template, mark and drill the 2 x fixing holes. Ensure holes are drilled into a solid or other suitable mounting.
5. Carefully make a small hole in the soft rubber seal attached to the backplate, then feed the supply cable through the seal whilst making sure it is a tight fit around the cable, and it is correctly located onto the backplate.
6. Ensure 2 x hex screws protrude through the backplate, then attach the backplate to the prepared mounting surface using suitable fixings. **Take care not to trap the cable behind the backplate.**
7. Make the electrical connections as follows.
   Connect the supply live (normally brown or red) to the fitting live (marked "L") on the terminal block.
   Connect the supply neutral (normally blue or black) to the fitting neutral (marked "N") on the terminal block.
   Connect the supply earth (normally green/yellow or unsheathed) to the fitting earth (marked "⏚") on the terminal block.

   Ensure electrical connections are tight and no loose strands of wire are left out of the connector block, and the earth connection is fully secured. Attach the terminal block to the plastic backplate and secure it with the terminal block plastic fixing pins.
8. Attach the fitting over the plastic backplate attached to the wall, whilst making sure no wires are protruding, and the rubber seal on the plastic backplate is correctly seated, and no obstructions are likely to prevent the wall light from seating correctly over the backplate.
   With the fixing screw protruding from the backplate, attach the fitting and secure it onto the backplate using the retaining hex capped nuts and any washers removed earlier. **Take care not to overtighten**.
9. Fit the glass into the glass frame slots whilst taking care not to cause injury with potential sharp glass edges.
10. Fit bulb, type and wattage as indicated on the fitting. **The wattage indicated must not be exceeded.**
11. To fit the crown onto the top of the wall light, whilst placing the crown onto the lantern attached to the wall, making sure the threaded holes are matched to the side flanges. Use the 2 x hex thumb nuts removed earlier to secure the frame assembly into position. **Take care not to over-tighten. Do not use any tools**.
12. Switch on the electricity supply at the fuse board.

GENERAL INFORMATION

This fitting is designed for external use, it must be fitted to a DRY FINISH as any dampness in concrete, wood stain, paint and etc can damage finish. **Do not use polish or abrasive cleaner - just a soft slightly damp cloth.**

IL5032 Issue 1 03/26

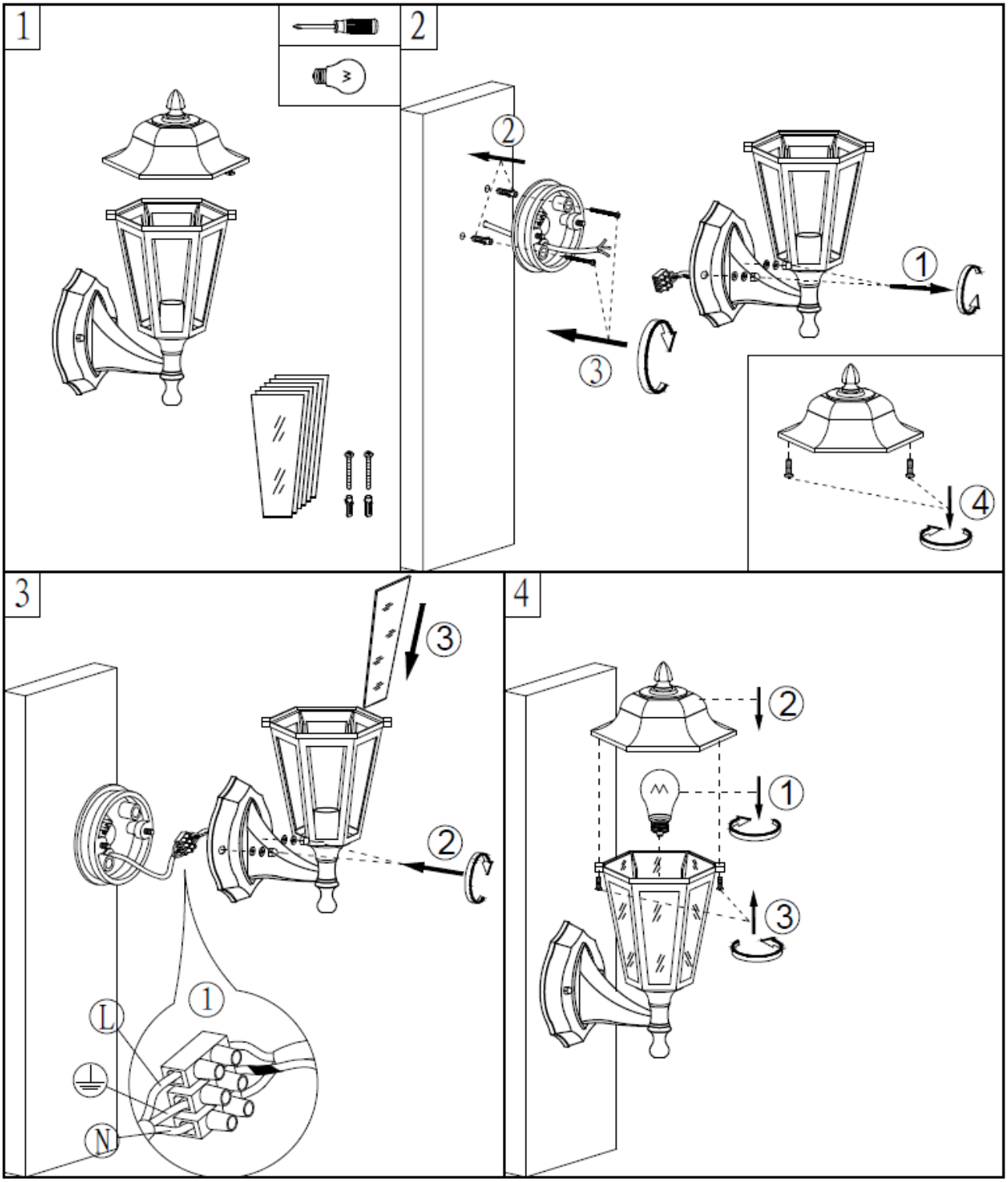

To register your product for an extended five-year warranty, please complete the simple form at

www.darlighting.co.uk/warranty

You'll need to fill in the details of the product, the retailer you purchased it from, and also the installer and the installation. Please also upload a clear copy of the original purchase invoice or receipt to complete this registration.

***UK:** där Lighting Ltd, Wildmere Road,Banbury, Oxon, OX16 3JZ*

***Ireland & EU:** Dar Lighting Ireland Limited, Suite 108, Q House, 76 Furze Road, Sandyford Industrial Estate, Dublin 18*

IL5032 Issue 1 03/26